Product Information

2875ZIP125P30-13 RIGHT

EAN 4031582324372

Walkway Castor with automatic side brake for moving walkways, flanged wheel with one ball race, left and right hand design, housing made of pressed steel, bright zinc plated, blue passivated, double ball bearing swivel head, wheel axle with nut, Wheel centre: plastic, Tread: rubber, with threadguards, precision ball bearing.Designed for the following palletsize: track width: approx: 2,75 mm, groove width: approx. 5,7 mm, groove depth: > 10 mm.**Hint**: Load capacity 100 kg per castor on level and securely attached floors, 40 kg per castor on walkways. Use on uneven floors, outdoors (ground beams, gaps, joints, manhole covers, etc.) can affect the life expectancy of castors. Load capacity 80 kg per castor on level and securely attached floors, 40 kg per castor on walkways. Please note that according to EN1929 only castors with a minimum wheel diameter of 120 mm can be used on walkways.

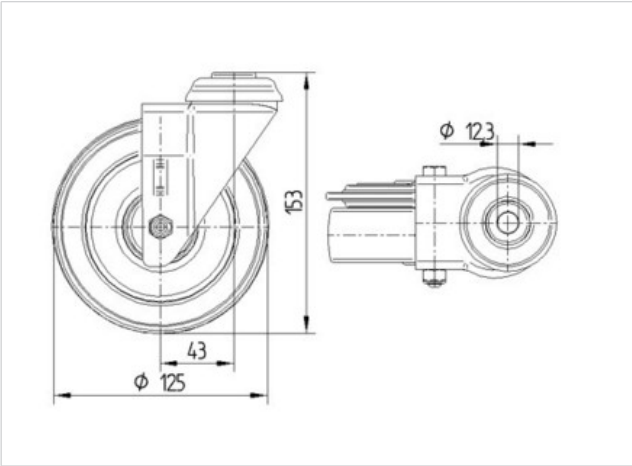

Technical Data	
Wheel diameter	125 mm
Width of Tread	32 mm
Centre hole	13 mm
Offset	40 mm
Swivel Interference	123 mm
Overall height	153 mm
Temperature	- 20 / + 60 °C
Standard	EN 12530
Weight	0.936 kg
Load capacity	100 kg
Load capacity (static)	200 kg
Hardness of tread	D 80 Shore

Roll performance	+ + + + +
Movement noise	+ + + + +
Attrition	+ + + + +
Corrosion resistance	+ + + + +

© Copyright 2012, TENTE International, www.tente.com, 21/05/2012

Product Information

2875ZIP125P30-13 RIGHT

EAN 4031582324372

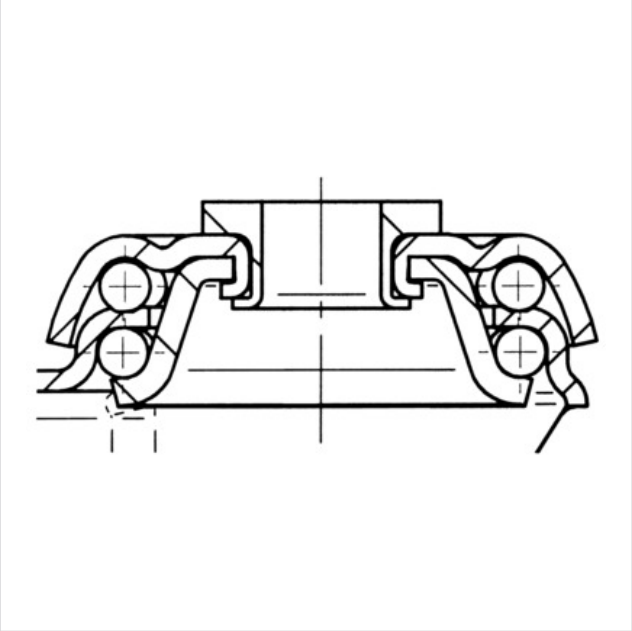

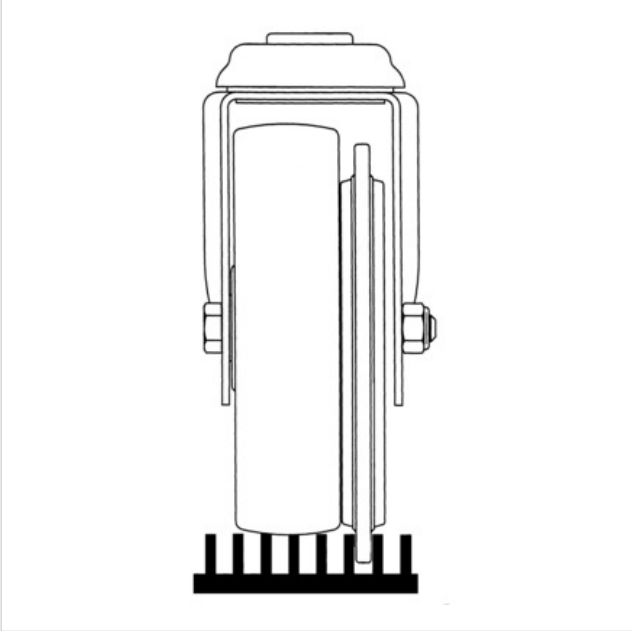

© Copyright 2012, TENTE International, www.tente.com, 21/05/2012